Ejercicios Índices de Weiss y Miller

Índices de Weiss y Miller	Figura
W $-1, -1, -1$	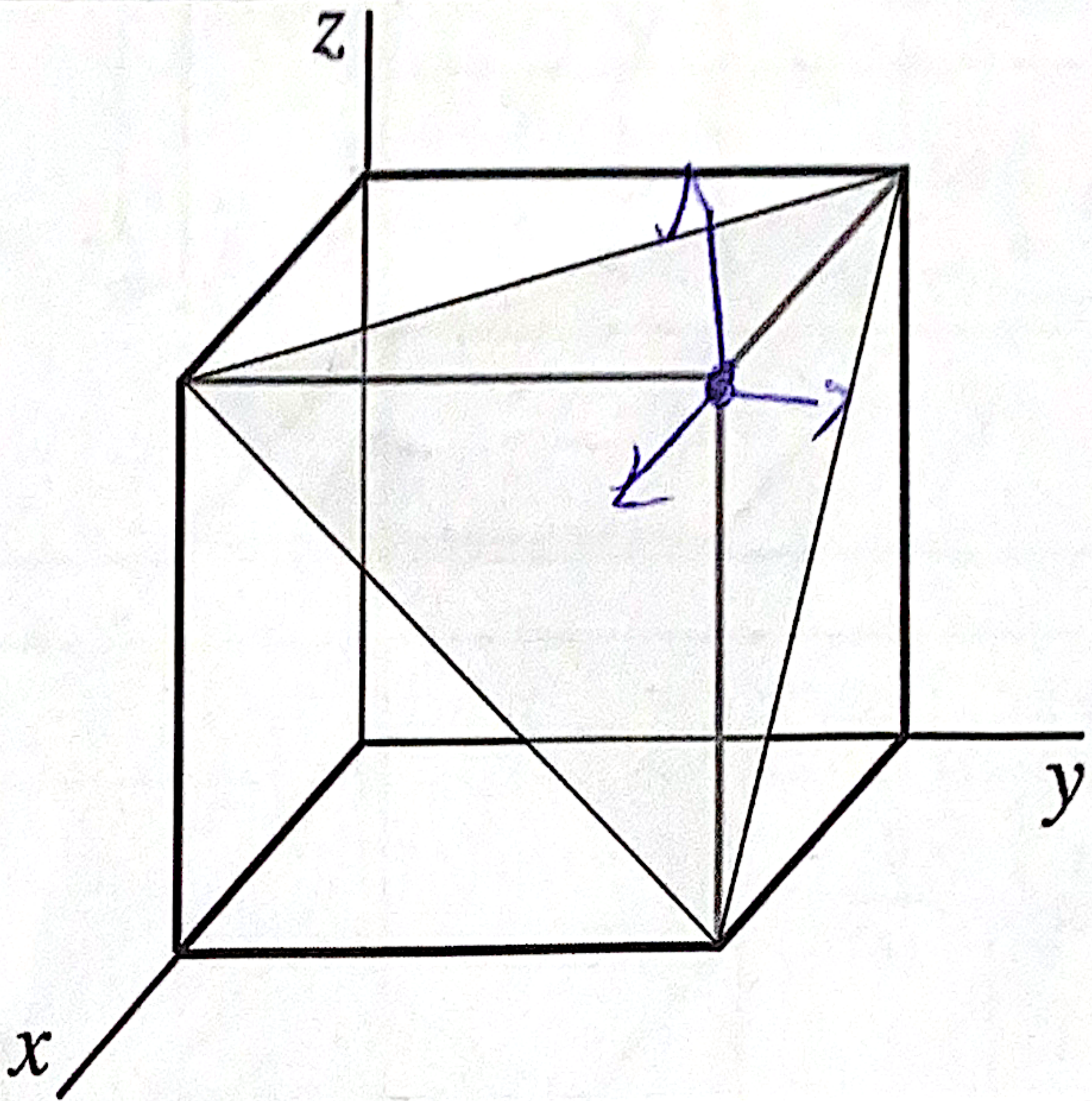
M $(\bar{1}\,\bar{1}\,\bar{1})$	
W $1, \infty, -1, 1/2$	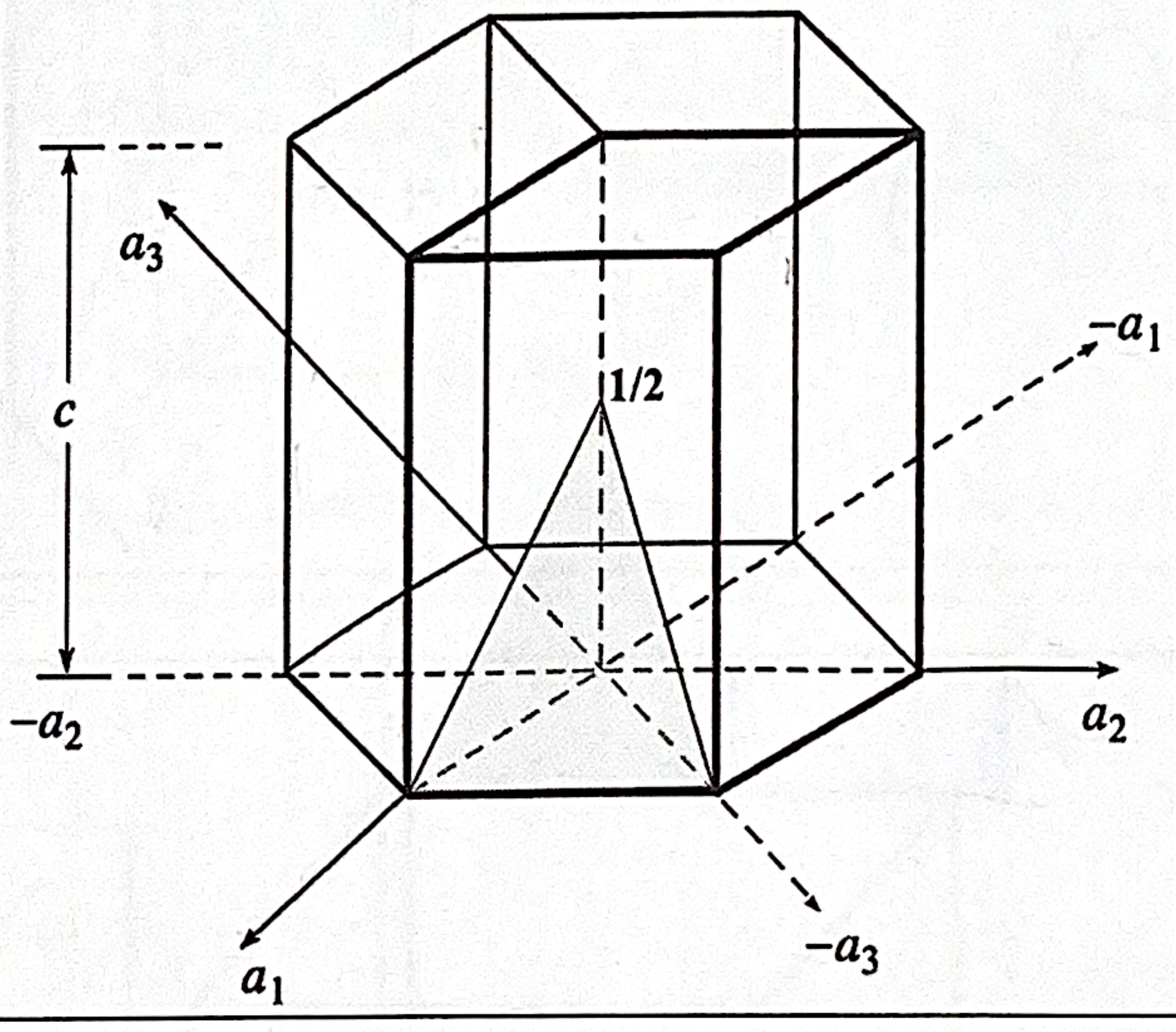 a_3 c 1/2 $-a_1$ $-a_2$ a_2 a_1 $-a_3$
M	
W $\infty, -1, 2$	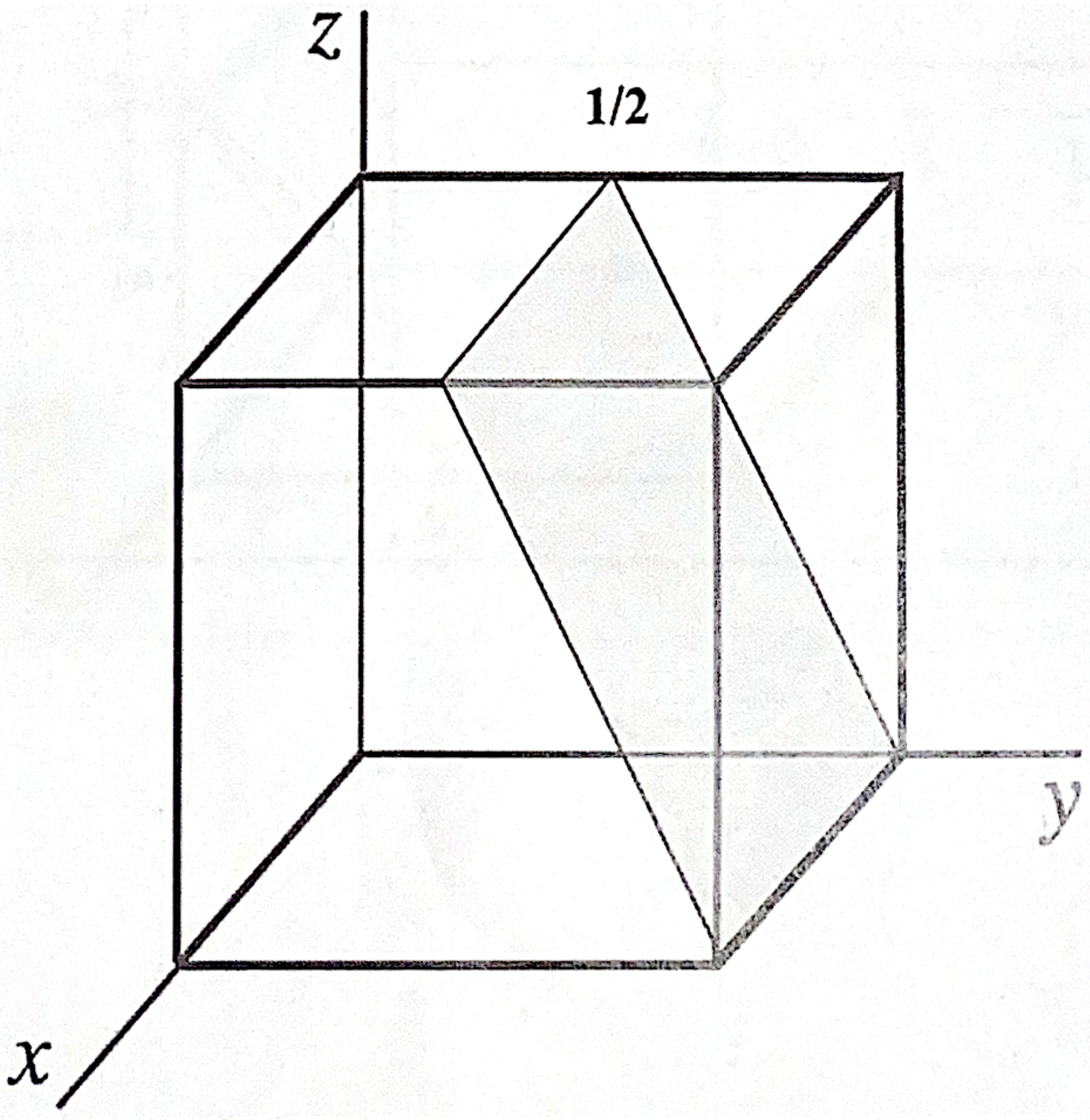
M $0, -\frac{1}{1}, \frac{1}{2}$ $0, -2, 1$ $(0\,\bar{2}\,1)$	

$\sqrt{\frac{1}{4}+\frac{4}{9}}$

$\frac{9+16}{36}$

$\sqrt{\frac{25}{36}}=\frac{5}{6}$

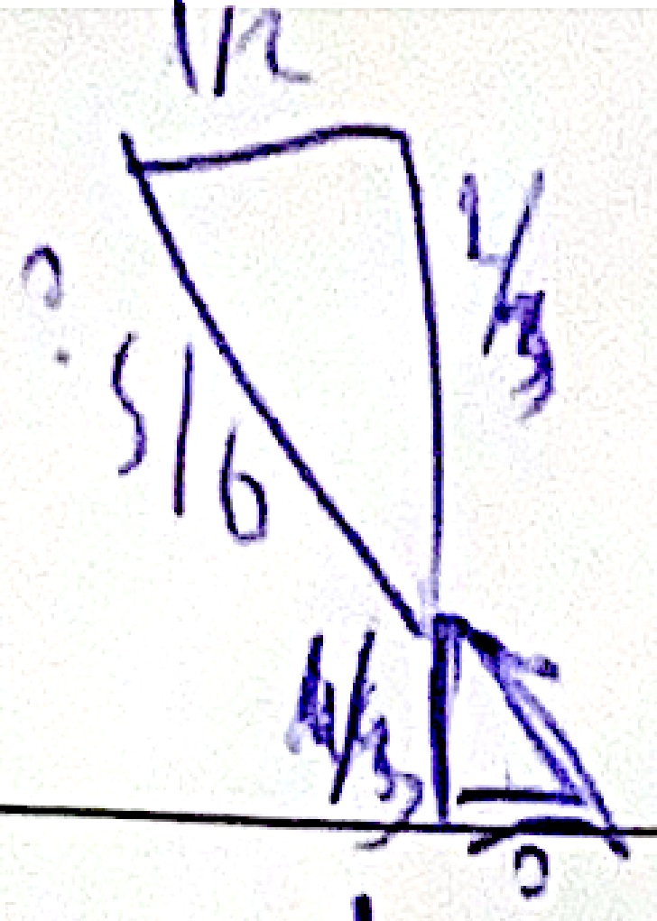

$1/3 \to 5/6$

$1/3 \to x$ $\frac{15}{36}$ $1/3$

$\frac{5}{18} : \frac{3}{2} \overset{1}{=} \frac{15}{36}$

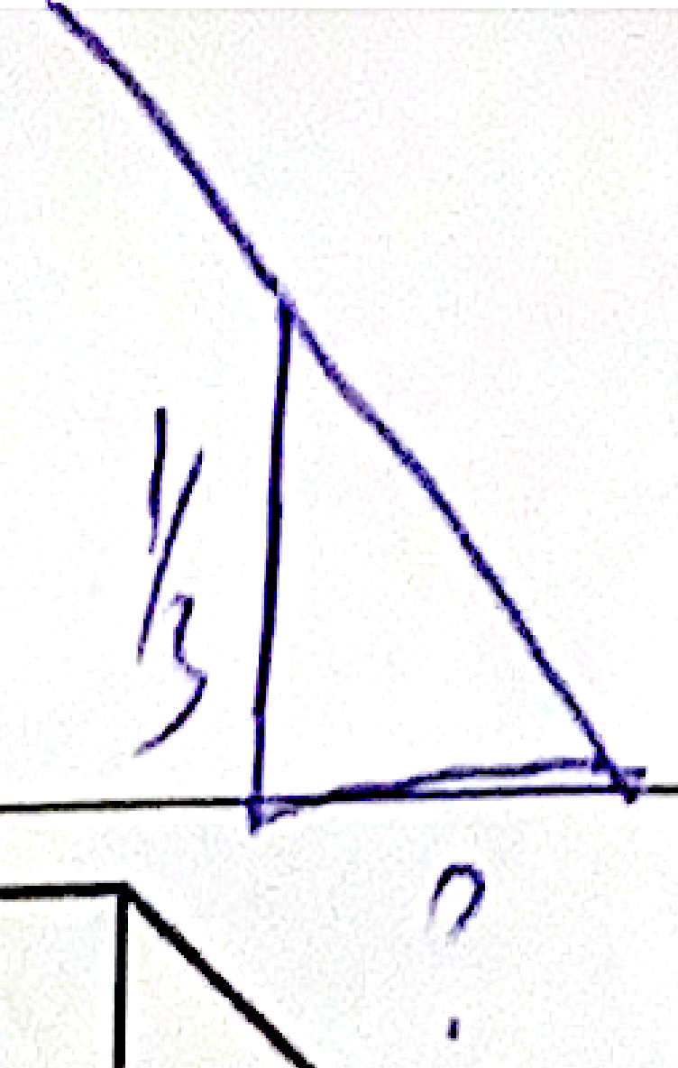

W 1, ~~1~~, $-\frac{1}{2}$, $-\frac{1}{3}$ 1, 1, $-\frac{1}{4}$, $\frac{1}{3}$ $\frac{5}{1}$ $\frac{1}{6}$? $=\frac{\frac{2}{3}}{\frac{1}{3}}$	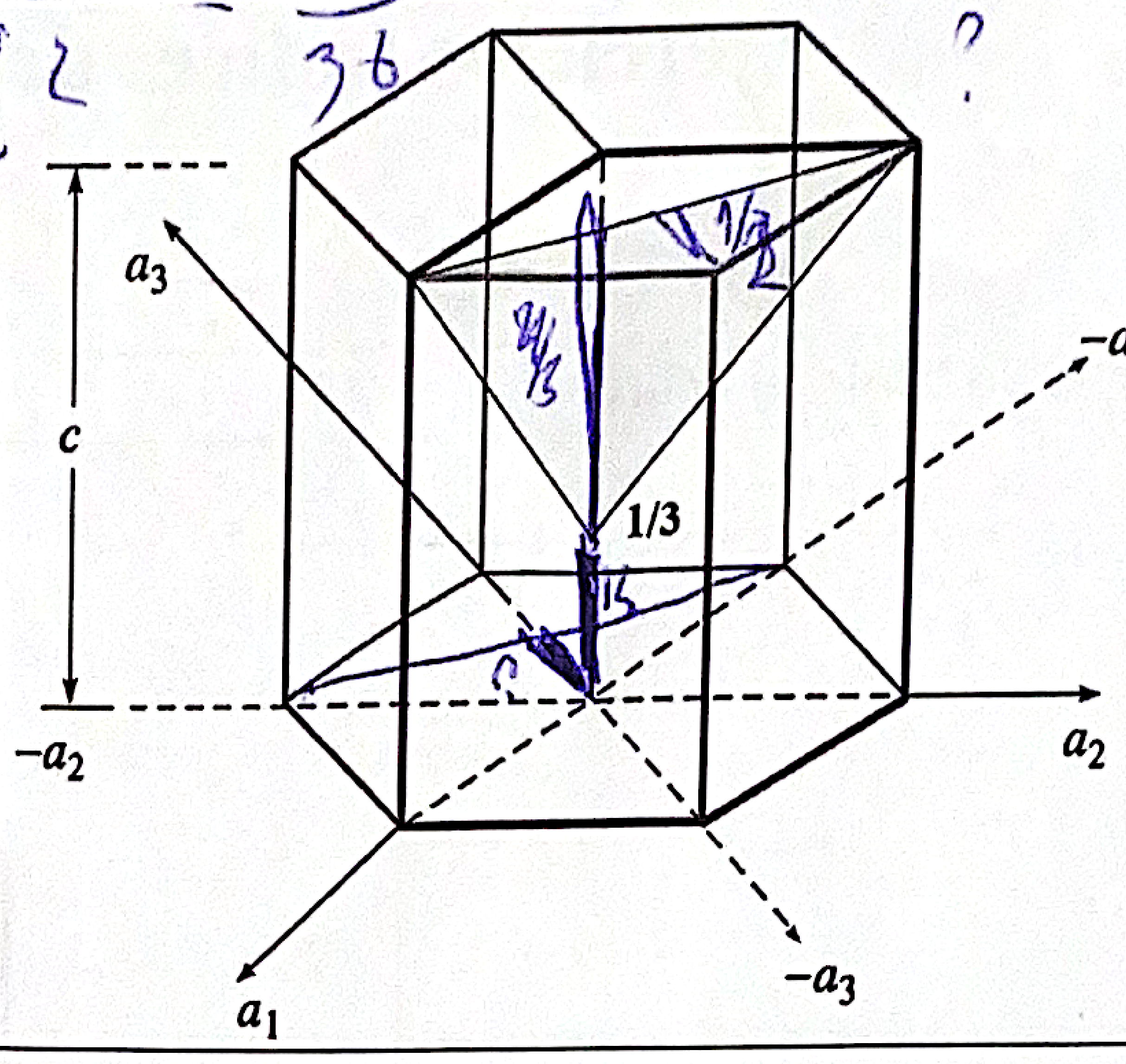 a_3 $-a_1$ c 1/3 1/2 $-a_2$ a_2 a_1 $-a_3$
M $(1\,1\,\bar{4}\,3)$ $\frac{\frac{2}{6}\cdot\frac{1}{3}}{\frac{2}{3}} = \frac{5}{6}\cdot\frac{1}{3}\cdot\frac{3}{2} = \frac{5}{18}$	
W 1, $-\frac{7}{15}$, ∞ $\frac{1}{1}$ $\frac{\frac{1}{7}}{--15}$, $\frac{1}{\infty}$	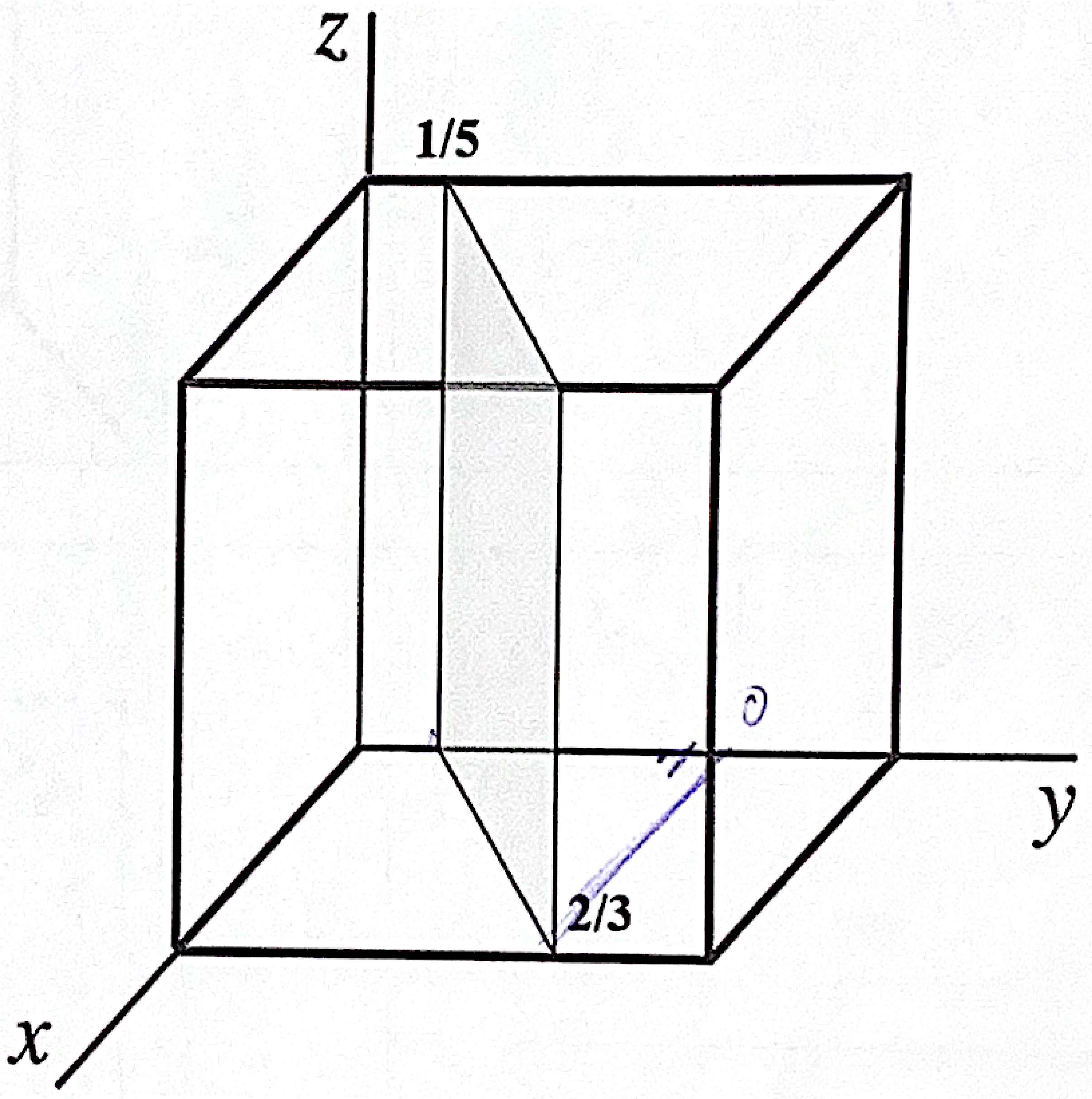
M ~~$15\,0\,\bar{7}$~~ $(7, \overline{15}\ 0)$	
W $\frac{1}{2}$, $-\frac{1}{2}$, -1, $\frac{1}{2}$	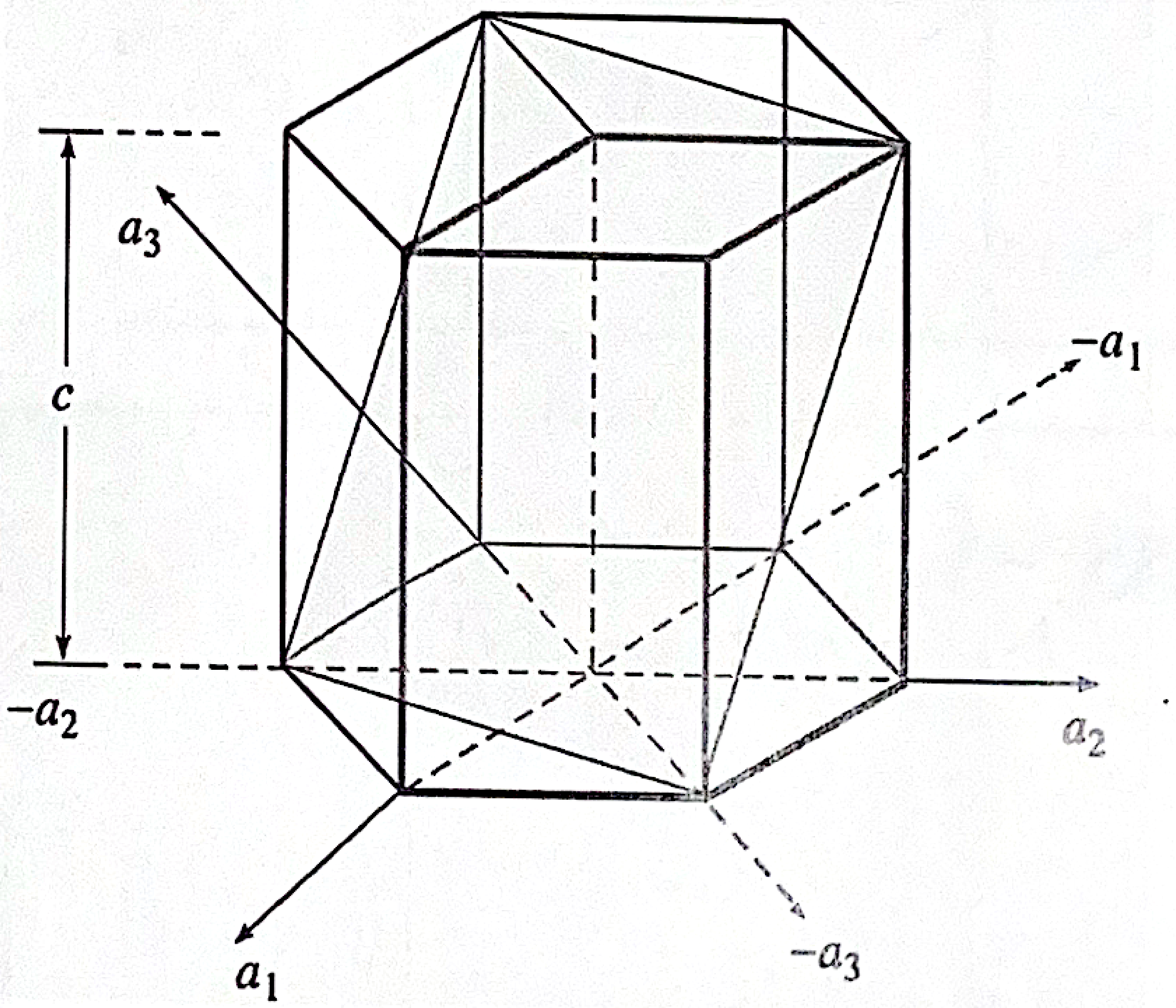 a_3 c $-a_1$ $-a_2$ a_2 a_1 $-a_3$
M $(2\ \bar{1}\ \bar{1}\ 2)$	

$-\frac{2}{3}=\frac{1}{3}$

$\frac{2}{3}-\frac{1}{5}$

$\frac{10-3}{15}=\frac{7}{15}$

1, 7/15, ∞

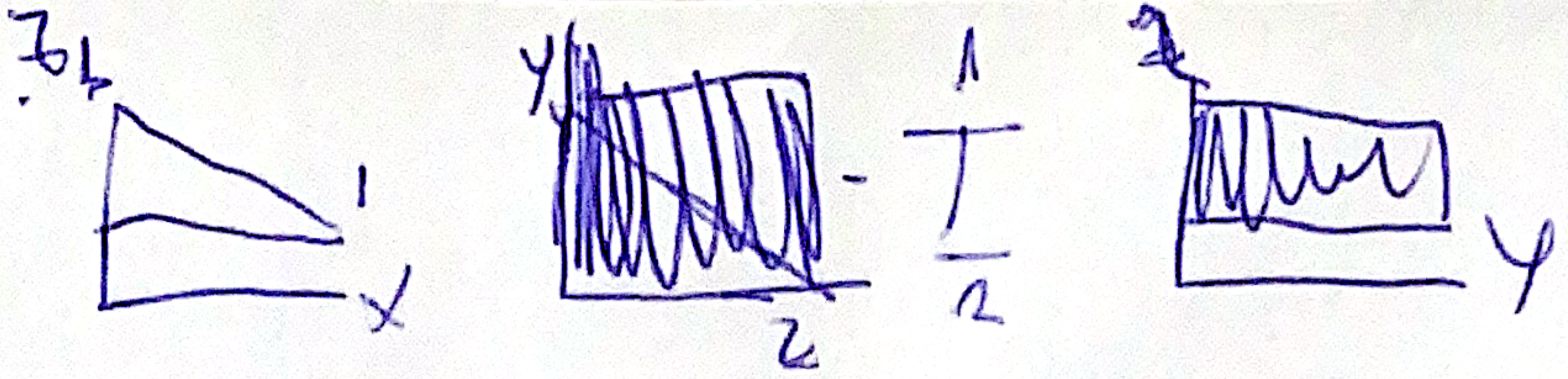
z
1
x
y
2
$-\frac{1}{2}$
2
y

W 1 , ∞ , $-\frac{2}{3}$ M $(2\ 0\ \bar{3})$	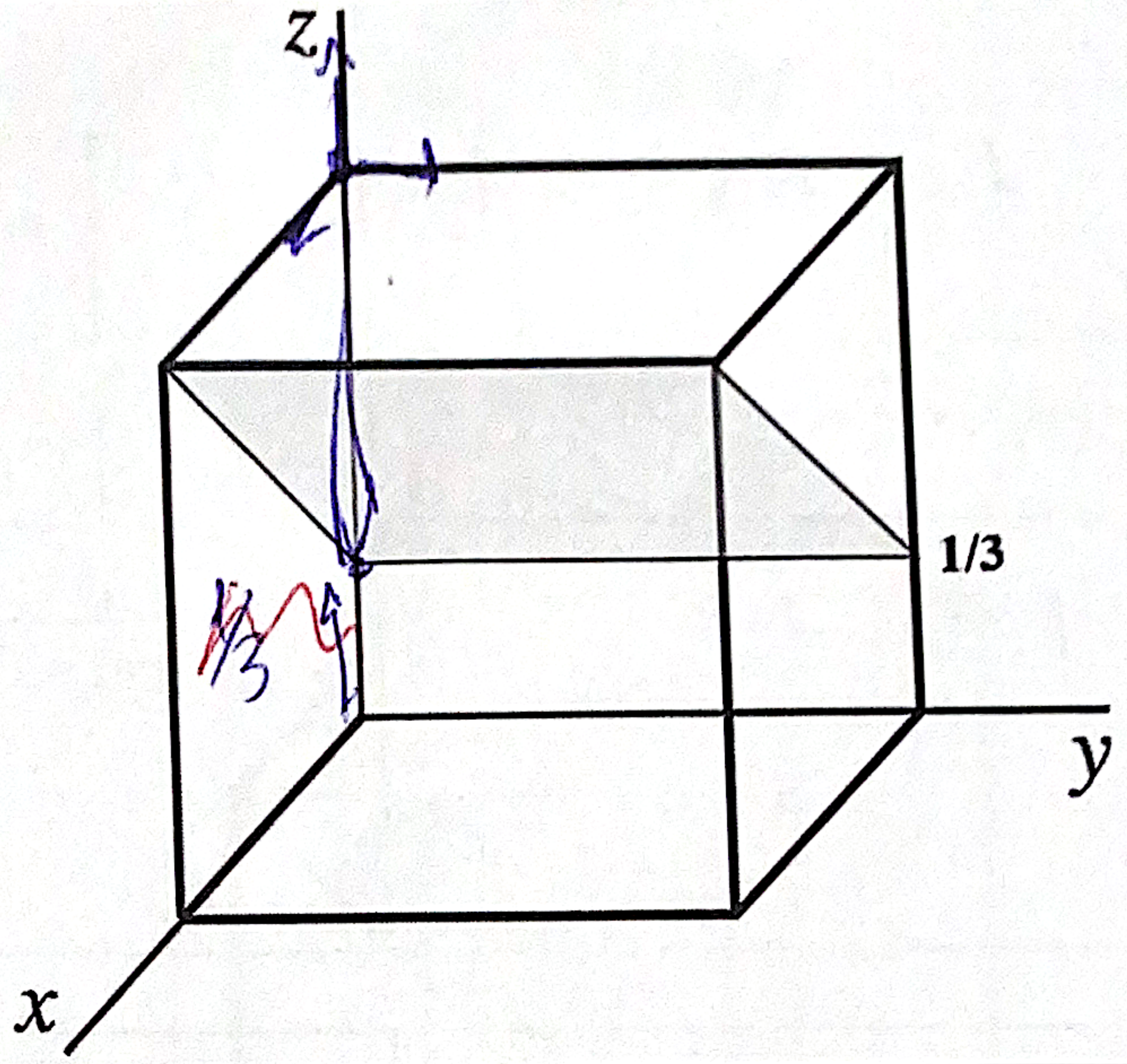
W $(1, \frac{3}{2}, 0)$ 1 1 M $(2, 2, 0)$ $\frac{2}{1}, \frac{3}{2}, 1$ M([illegible], 4, 6)	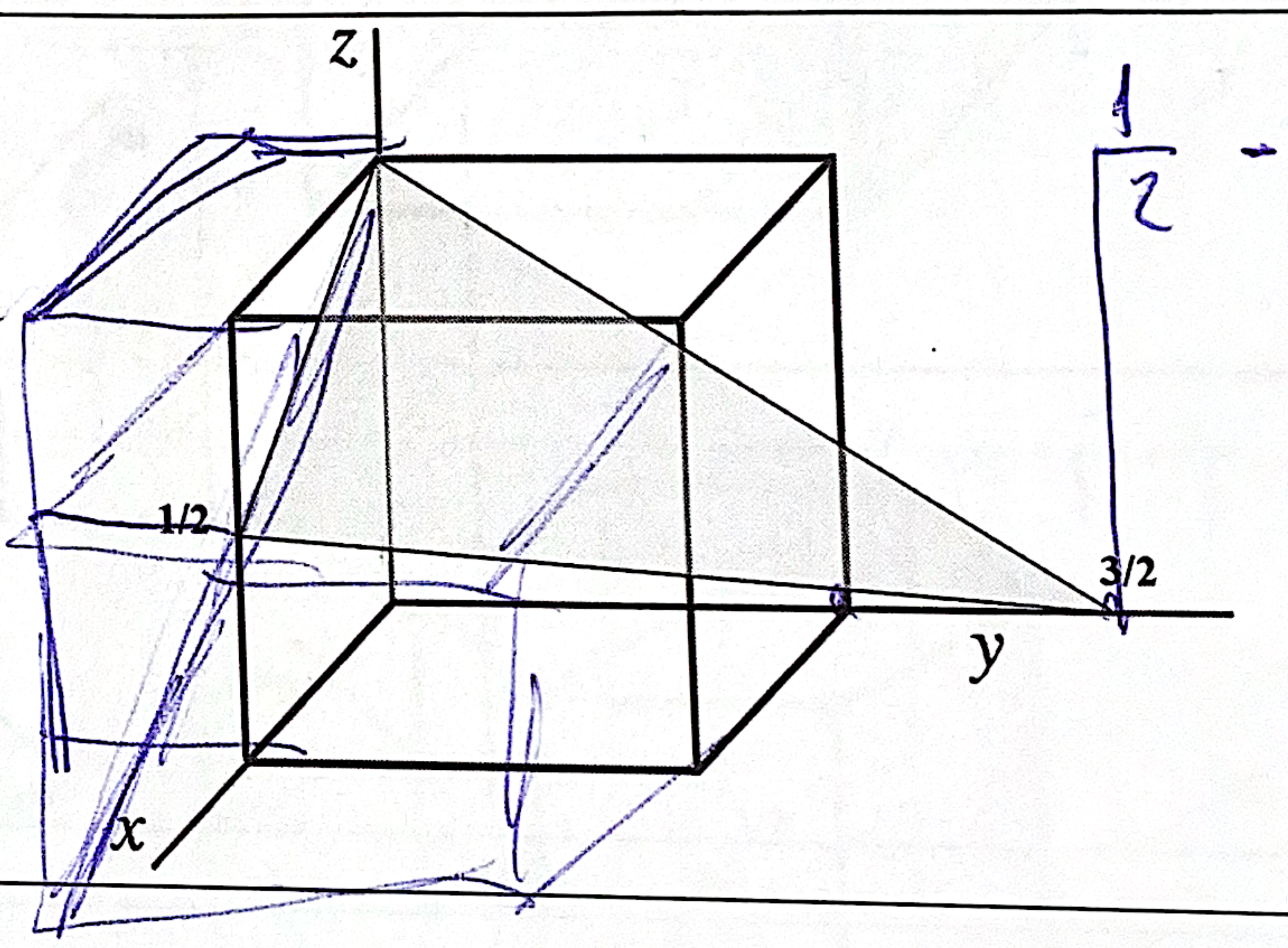 z $\frac{1}{2}$ 1/2 3/2 y x
W M $-1, -\frac{1}{2}, \frac{2}{3}$ $-1, -2, \frac{3}{2}$	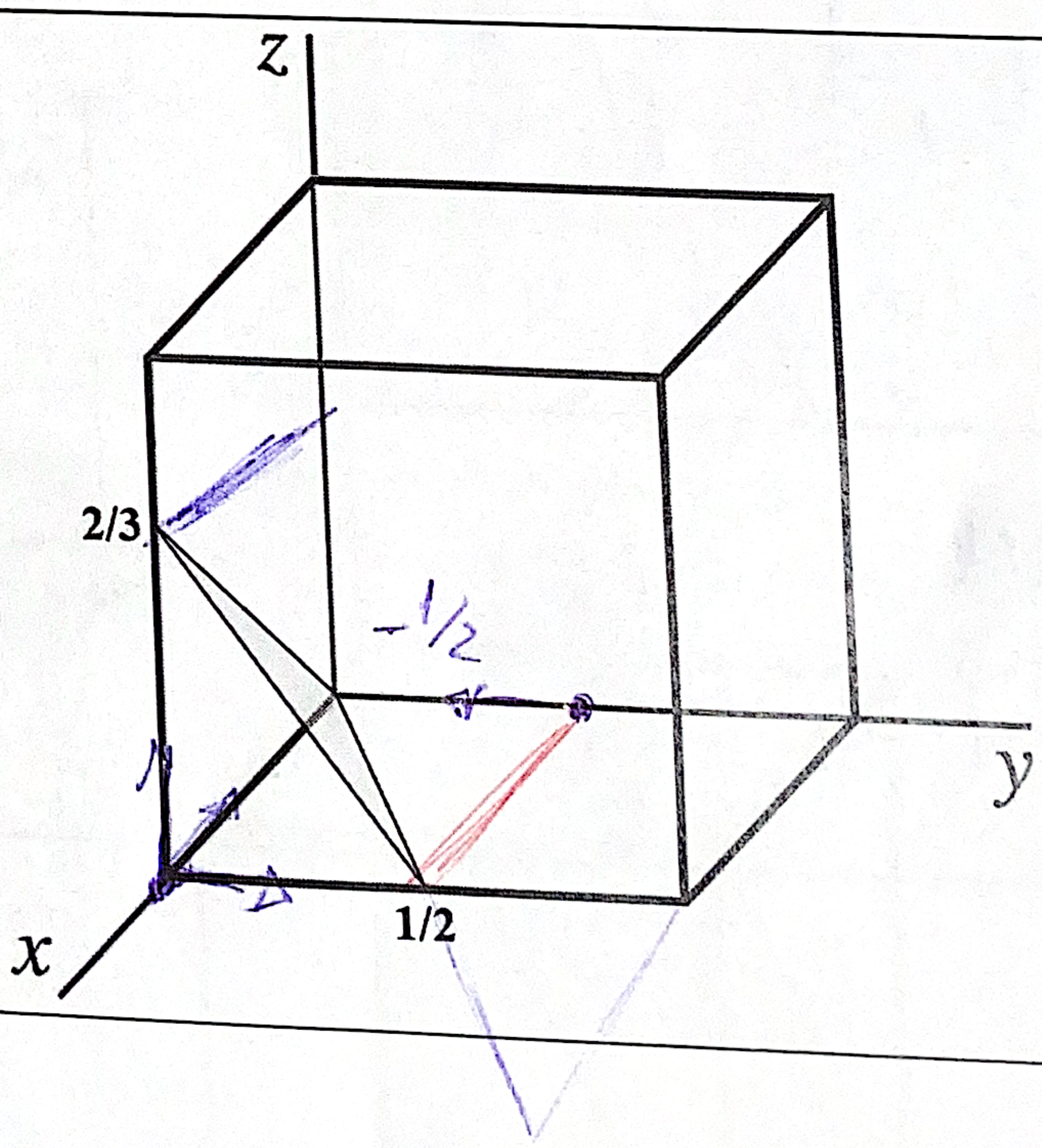 z 2/3 $-\frac{1}{2}$ y 1/2 x

$-\frac{1}{3}$

$(\bar{2}\ \bar{4}\ 3)$

W

$\overset{0}{-1}, 1, \infty, -1$

M

$(\bar{1}, 1\ 0\ \bar{1})$

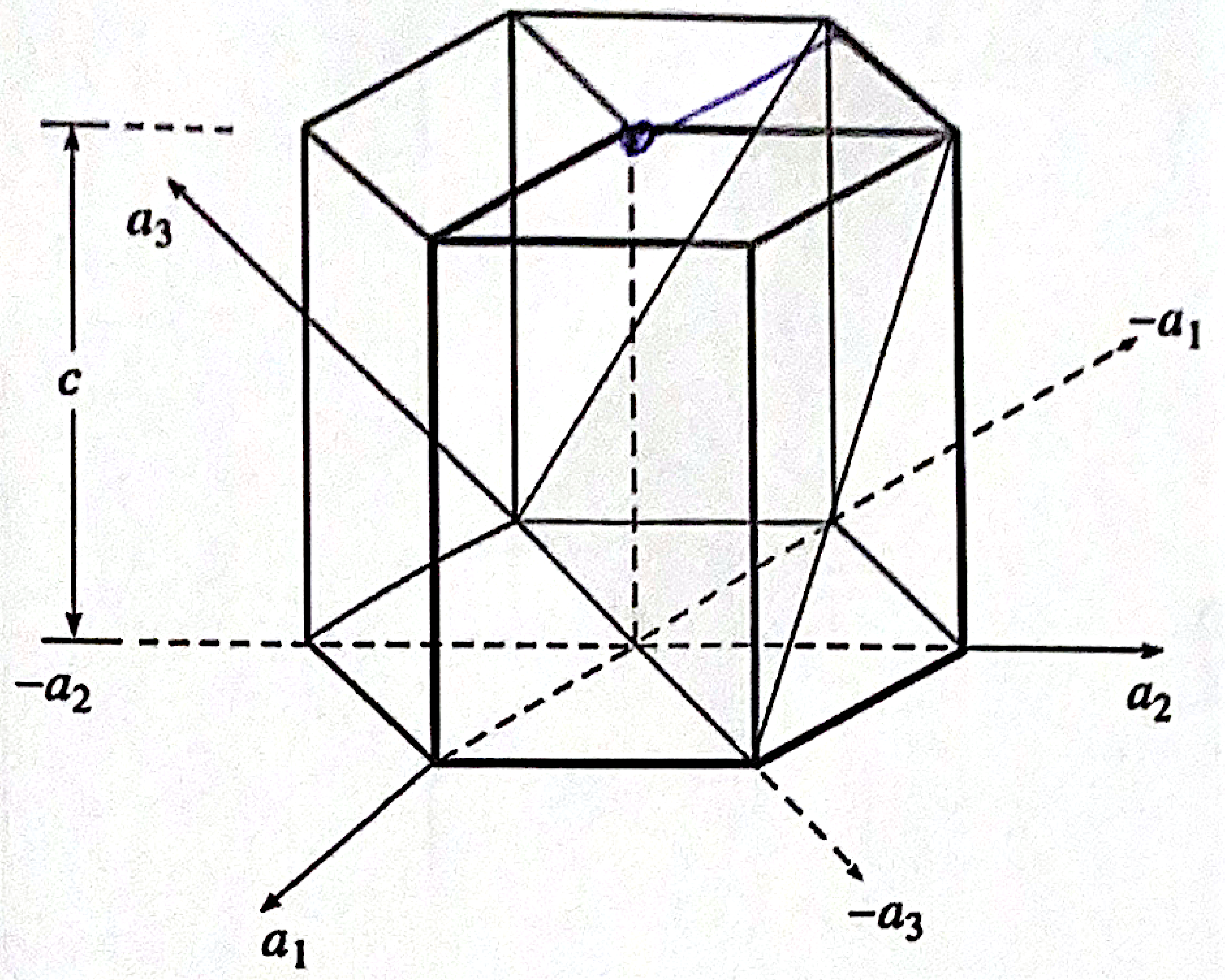
a3
c
−a1
−a2
a2
a1
−a3

W

$\frac{1}{2}$; 1 , −1 , $\frac{1}{2}$

M

$(2\ \bar{1}\ \bar{1}\ 2)$

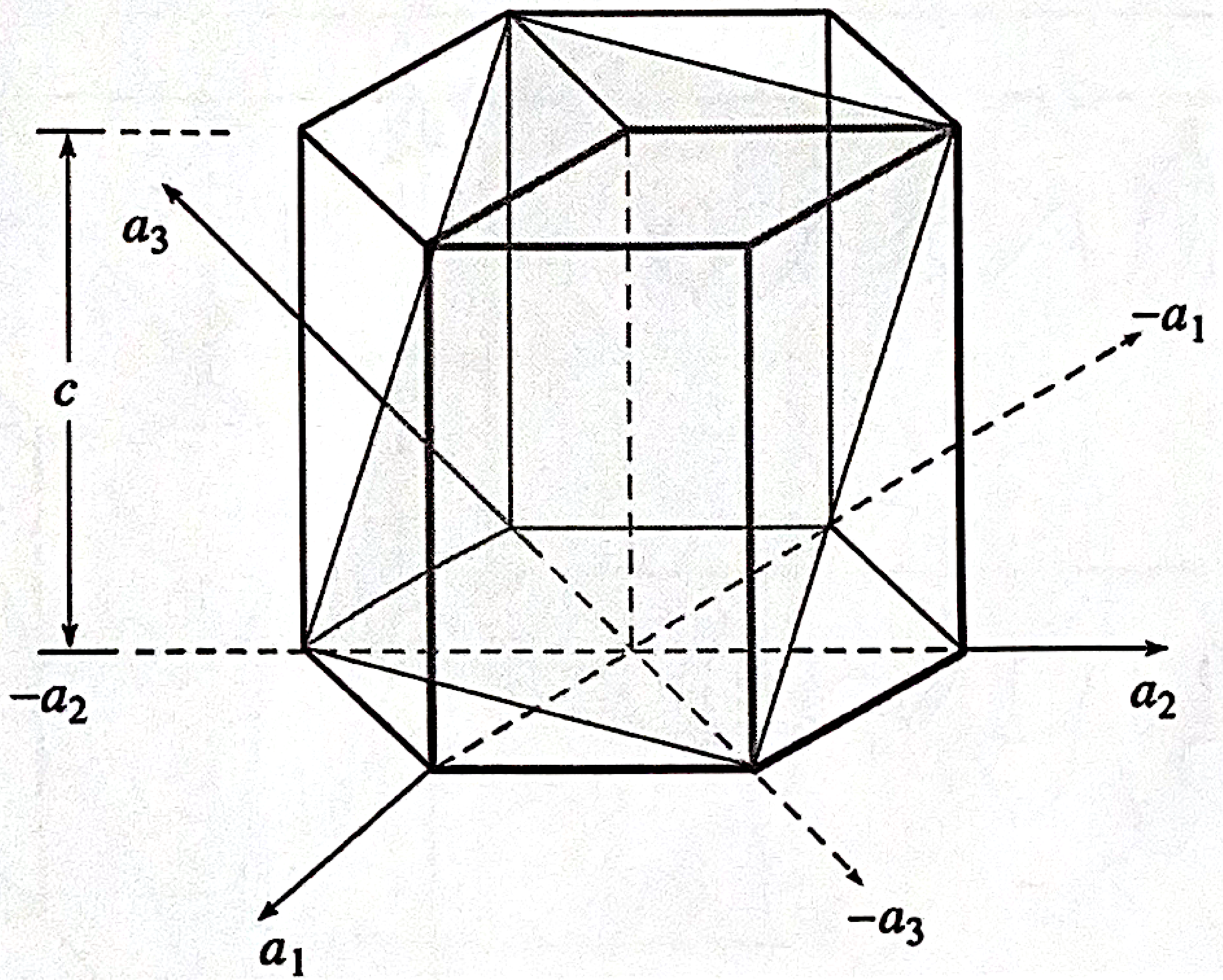
a3
c
−a1
−a2
a2
a1
−a3

W

1 , −1 , $\frac{1}{2}$ $\frac{1}{4}$

$\frac{1}{1}$, $-\frac{1}{1}$, 2 , 4

M

quē

$(1\ \bar{1}\ 2\ 4)$

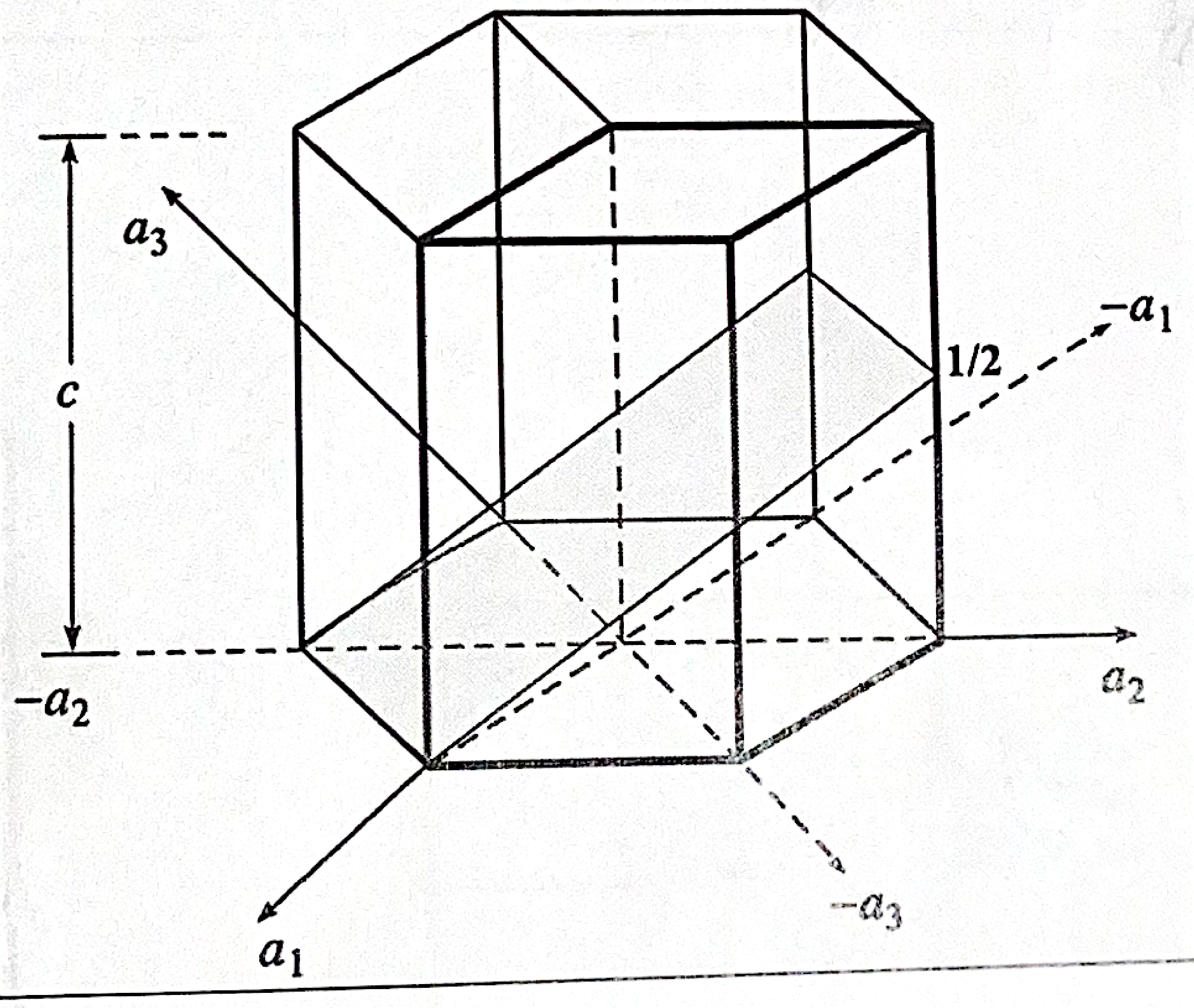
a3
c
−a1
1/2
−a2
a2
a1
−a3